WZ EUROCOPERT
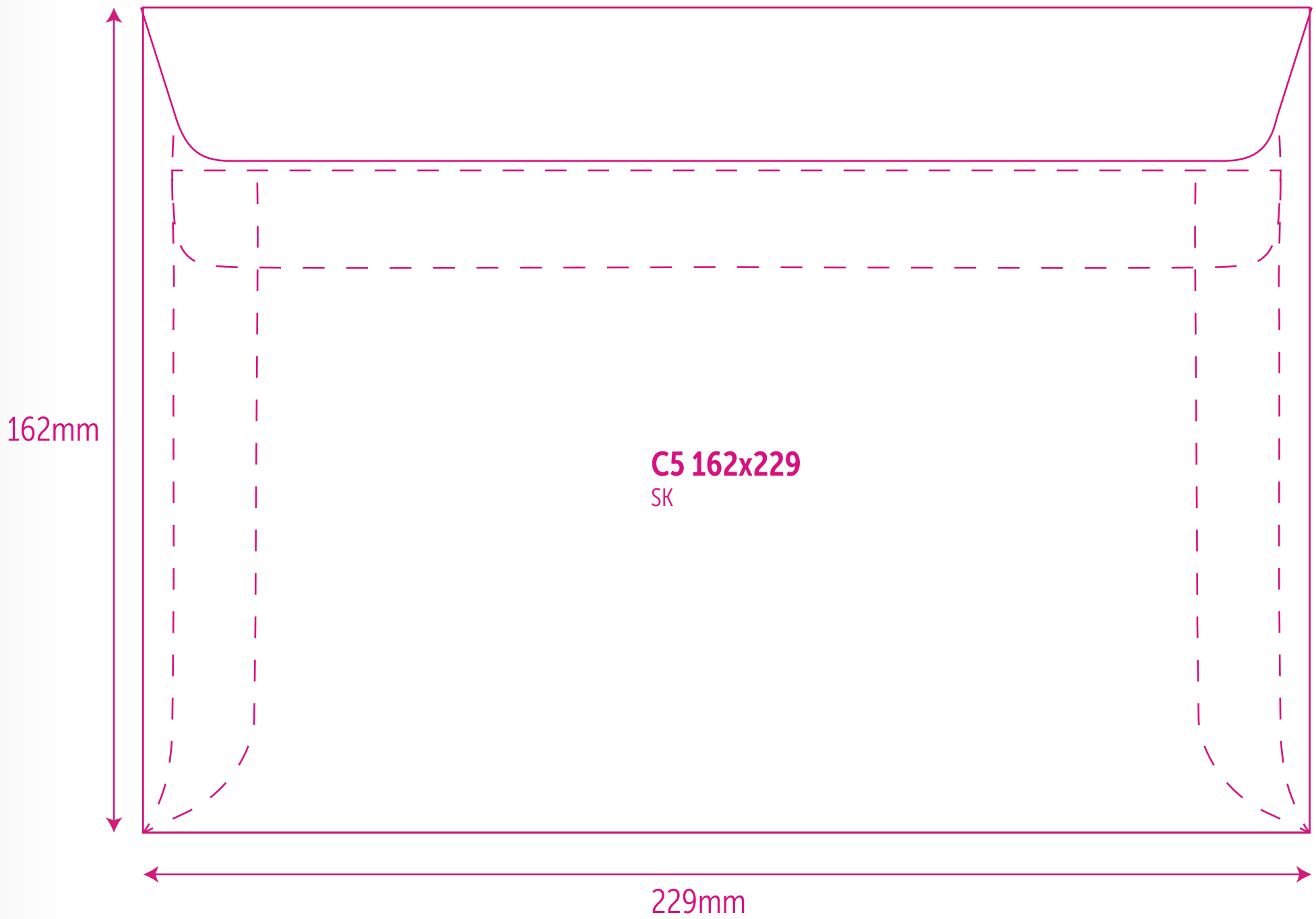
WWW.WZEUROCOPERT.PL